Project Report

IOT-Based Smart EPS Lab Automation & Energy Management System

I. List of Figures

Figure 1: Overall System Architecture of Proposed IoT-Based Smart Lab

Figure 2: Block Diagram of Smart Electrical Laboratory Automation System

Figure 3: Hardware Integration Diagram (Sensors with Arduino and ESP32)

Figure 4: Circuit Diagram of Complete System

Figure 5: ESP32 Wi-Fi and Firebase Communication Flow

Figure 6: Firebase Realtime Database Structure

Figure 7: Experimental Setup in Laboratory Environment

Figure 8: Sensor Data Transmission Flowchart

II. List of Tables

Table 1: Comparison of Existing IoT-Based Monitoring Systems

Table 2: Specifications of Hardware Components Used

Table 3: Technical Specifications of ESP32 and Arduino Uno

Table 4: Sensor Specifications (DHT22, MQ-2, IR, PZEM-004T)

Table 5: Pin Configuration and Interfacing Details

Table 6: Electrical Parameters Measured by PZEM-004T

Table 7: Wi-Fi and Firebase Configuration Parameters

Table 8: Experimental Testing Results

Table 9: Energy Consumption Before and After Automation

Table 10: Cost Analysis of Complete System

Table 11: SDG Mapping and Project Impact Analysis

III. Abstract

The greatest problems in conventional electrical laboratories are energy wastage and lack of real-time monitoring. Laboratory equipment including lights, fans and electrical equipment used in most learning institutions is always on even when not necessary translating to waste of power

and operating expenses as well as lack of efficiency in the system. Moreover, the traditional laboratories do not have adequate environmental monitoring and automatic control systems that reduces security and optimized use of energy.

The present project introduces the design and development of Smart Electrical Laboratory Automation and Energy Monitoring System on the basis of IoT and ESP32, Arduino Uno, and Firebase Realtime Database. The suggested system will incorporate various environmental and electrical sensors that will allow smart monitoring and control. To improve the safety of the laboratory, the sensor is DHT22 to measure the level of temperature and humidity, and MQ-2 to detect the presence of smoke and other harmful gases. Motion and presence detection is realised with the help of an Ultrasonic sensor to determine the occupancy of the laboratory. The PZEM-004T energy meter is used to monitor electrical parameters (voltage, current, power, total energy consumption, etc.) in real time.

The Arduino Uno acts as the main device of data acquisition, receiving and interpreting sensor readings. The processed data is clocked to the ESP32 microcontroller through the serial communication. The ESP32 is the IoT gateway as it has an on-board Wi-Fi access which allows secure internet connection and can upload sensor data to the Firebase cloud platform periodically. It is a cloud integration that can be used to monitor, log and visualize data and control laboratory equipment in real-time via a web or mobile dashboard.

To automate electrical loads, relay modules are added which include lights, fans, and laboratory equipment. The system automatically turns devices ON or OFF based on predetermined threshold values, motion status, the energy consumption level or user commands at a distance. This smart automation will save a lot of unwarranted power consumption and increase the overall efficiency of the energy consumption.

The experimental testing proves that the system is characterized by a correct sensor measurement, a stable wireless connection, a quick cloud synchronization, and an efficient device automation. The solutions suggested are economical, extendable and capable of fitting different environments. It is not restricted to electrical laboratories alone, but can find application in smart classrooms, research centers and less energy consuming buildings. The paper confirms the reality that a solution to smart energy management and lab automation with the use of the IoT technology and cloud computing systems is a practical and sustainable one.

1. Introduction

The fast development of Internet of Things (IoT) has facilitated smart monitoring and automation in any field such as education, healthcare, and industry. Due to the constant running of lights, fans, and the experimentation apparatus, electrical engineering laboratories use a lot of energy. When using traditional laboratory setups, equipment is usually left powered to the ON position even when it is not needed thus leading to energy wastage, higher operating expenses and fire hazards.

As the technology of IoT progresses, remote control and real-time monitoring of electrical equipment is now possible with the help of the cloud-based platform. Through the combination of sensors and microcontrollers and cloud databases, the laboratories can be made into smart environments that have the capability of automatic control and energy management.

The proposed project is an IoT-driven laboratory automation and energy monitoring system that is proposed as an electrical laboratory using ESP32, an Arduino Uno board, and Firebase Realtime Database. The system tracks the conditions of the environment, the occupancy, the electrical parameters, and allows the control of laboratory devices remotely to enhance the efficiency and safety.

2. Literature Review

Several research studies have focused on IoT-based automation and energy monitoring systems:

- Environmental monitoring and automation The IoT smart laboratory systems are suggested to fulfill the needs of environmental monitoring and automation (Poongotha et al., 2018).
- The efficiency systems of IoT based labs have enhanced accessibility remotely and also operation control (Islam et al., 2024).
- IoT-based smart home energy management systems have shown the potential in energy savings (Muradkhan et al., 2016).
- Energy-effective monitoring of buildings has been a popular topic of occupancy monitoring (Akkaya et al., 2015).
- The IoT systems have also been discussed in terms of security (Suo et al., 2012).

The current systems are mainly targeted at either environmental monitoring or energy monitoring. Others have local storage rather than real-time cloud databases. There is limited research that incorporates:

- Environmental sensing
- Energy monitoring
- Real-time cloud synchronization
- Remote automation
- Multi-sensor integration

This project improves upon previous work by combining all these features using Firebase cloud integration for real-time monitoring and control.

3. Project Description

The suggested system is an IoT-based smart lab automation and energy monitoring system. It consists of various sensors and microcontrollers that are used to measure both environmental and electrical parameters within a real time context.

The system operates as follows:

- Sensors collect temperature, humidity, gas/smoke levels, motion, and electrical measurements.
- Arduino Uno processes sensor data.
- ESP32 transmits processed data to Firebase cloud via Wi-Fi.
- A web/mobile dashboard displays real-time data.
- Relay modules automatically control lights and fans based on motion detection and predefined thresholds.
- Users can manually control devices remotely.

The system ensures intelligent energy management, safety monitoring, and remote accessibility in laboratory environments.

4. Project Goals

The main goals of the project are:

1. Reduce energy wastage in electrical laboratories.
2. Monitor environmental parameters (temperature, humidity, smoke).
3. Monitor electrical parameters (voltage, current, power, energy).
4. Enable real-time cloud-based monitoring.
5. Automate laboratory equipment control.
6. Provide a low-cost and scalable smart laboratory solution.
7. Improve laboratory safety through smoke detection.

5. Project Methodology

The structured methodology adopted in implementing the project was as follows:

Step 1: Hardware Integration

Arduino Uno, ESP32, and relay modules were connected to environmental sensors (DHT22, MQ-2, Ultrasonic), energy meter (PZEM-004T), and the rest.

Step 2: Data Acquisition

Arduino Uno received signals of analog and digital sensors and transformed them into meaningful parameters.

Step 3: Communication Setup

The transmission of sensor data between Arduino and ESP32 was done over UART serial.

Step 4: Cloud Integration

ESP32 was connected to Wi-Fi and sent the information to Firebase Realtime Database to be synchronized in real-time.

Step 5: Automation Logic

The automatic switching of lights and fans according to the occupancy and threshold principles was also controlled logically. It was also allowed to be controlled manually through dashboard.

Step 6: Testing & Validation

The system was tested under laboratory conditions to verify:

- Accuracy of sensor readings
- Real-time cloud updates
- Relay switching performance
- Wi-Fi communication reliability

6. Hardware and Software

A. Hardware Components

1. **ESP32** – Wi-Fi enabled microcontroller for cloud communication and relay control.
2. **Arduino Uno** – Used for sensor interfacing and data acquisition.
3. **DHT22 Sensor** – Measures temperature and humidity.
4. **MQ-2 Sensor** – Detects smoke and harmful gases.
5. **Ultrasonic Sensor** – Detects human presence and occupancy.
6. **PZEM-004T** – Measures voltage, current, power, and energy consumption.
7. **Relay Module** – Controls electrical loads such as lights and fans.

B. Software Tools

1. **Arduino IDE** – Programming and uploading code.
2. **Embedded C** – Used for control and communication logic.
3. **Firebase Realtime Database** – Cloud storage and real-time synchronization.
4. **Serial Monitor** – Debugging and testing sensor outputs.

7. SDG Mapping

This project aligns with the following United Nations Sustainable Development Goals (SDGs):

SDG 7 – Affordable and Clean Energy

The system promotes energy efficiency by reducing unnecessary electricity consumption through automated control and monitoring.

SDG 9 – Industry, Innovation, and Infrastructure

It introduces innovative IoT-based infrastructure in educational institutions for smart monitoring and automation.

SDG 11 – Sustainable Cities and Communities

Smart laboratories contribute to energy-efficient and sustainable buildings.

SDG 12 – Responsible Consumption and Production

Real-time monitoring encourages responsible energy usage and minimizes wastage.

IV. Theory

The offered Smart Electrical Lab Automation and Energy Monitoring System is a proposed IoT-based solution, designed on the principles of Internet of Things (IoT), embedded systems, sensor interfacing, cloud computing, and automated control systems.

Internet of Things (IoT) Concept

The Internet of Things (IoT) is defined as a system of physically related devices, which gather, transmit and relay information online without the involvement of a human. In this undertaking, IoT will enable remote control and real-time monitoring of laboratory equipment by connecting it to the cloud. The ESP32 microcontroller is used as an IoT gateway and sends sensor data to the Firebase cloud database over Wi-Fi.

Embedded System Architecture

An embedded system is a microcontroller-based system designed for specific control tasks. The project uses a dual-controller architecture:

- **Arduino Uno** – Responsible for sensor interfacing and data acquisition.
- **ESP32** – Handles wireless communication and cloud connectivity.

The Arduino reads analog and digital signals from sensors, processes the data, and sends formatted values to the ESP32 through UART serial communication.

Sensor Working Principles

a) Temperature and Humidity Sensing (DHT22)

The DHT22 sensor will work on a capacitive humidity sensor element and a thermistor to measure the temperature. It transforms the environmental conditions into digital signals that are read in the Arduino.

b) Smoke and Gas Detection (MQ-2)

The MQ-2 sensor senses smoke and combustible gases with the help of a sensitive material (SnO_2). As the concentration of the gas rises, the sensor resistance varies and the resulting analog voltage is proportional to the concentration of the gas.

c) Occupancy Detection (Ultrasonic Sensor)

The ultrasonic sensor operates on the principle of the echo reflection. It produces the sound waves of high frequency and also it is the measure of time that the echo takes to bounce back. Distance can be determined as:

$$\text{Distance} = (\text{Speed of Sound} \times \text{Time}) / 2$$

In the event that no object (human presence) is perceived in a preset window, the system switches the lights and fans off to minimize the use of energy.

d) Electrical Energy Monitoring (PZEM-004T)

PZEM-004T module was used to measure the voltage, current, power, and energy consumption.

$$P = V \times I$$

Energy consumption (kWh) is calculated as:

$$\text{Energy} = \text{Power} \times \text{Time}$$

This makes it possible to track the electricity consumption in laboratories in real time.

Cloud Computing and Firebase Integration

Cloud computing enables data saving and accessing on the Internet. Firebase Realtime Database caters sensor values and device conditions in real time. The ESP32 periodically sends readings and users can view or manage devices using a dashboard interface.

The firebase resorts to a data synchronization method that is based on the JSON format, so that the hardware system and the user interface are updated immediately.

Automation and Control Theory

The automation system operates using threshold-based control logic:

- If motion is not detected → Turn OFF lights and fans.
- If smoke level exceeds threshold → Trigger alert.
- If temperature exceeds limit → Activate cooling system (if integrated).
- Manual override is available through dashboard control.

Relay modules act as electrically operated switches controlled by the ESP32. When a control signal is received, the relay energizes or de-energizes to switch electrical loads ON or OFF.

Energy Efficiency Principle

Energy efficiency is achieved through:

- Occupancy-based switching
- Real-time energy monitoring
- Remote control capability
- Automated load management

By minimizing unnecessary device operation, the system reduces power wastage and operational costs.

Theoretical Foundation Summary

The project combines:

- IoT communication principles
- Embedded system data processing
- Sensor-based environmental monitoring
- Electrical power measurement theory
- Cloud database synchronization
- Intelligent automation control

This integrated theoretical framework enables the development of a smart, energy-efficient, and remotely accessible laboratory system.

PROJECT BLOCK DIAGRAM :

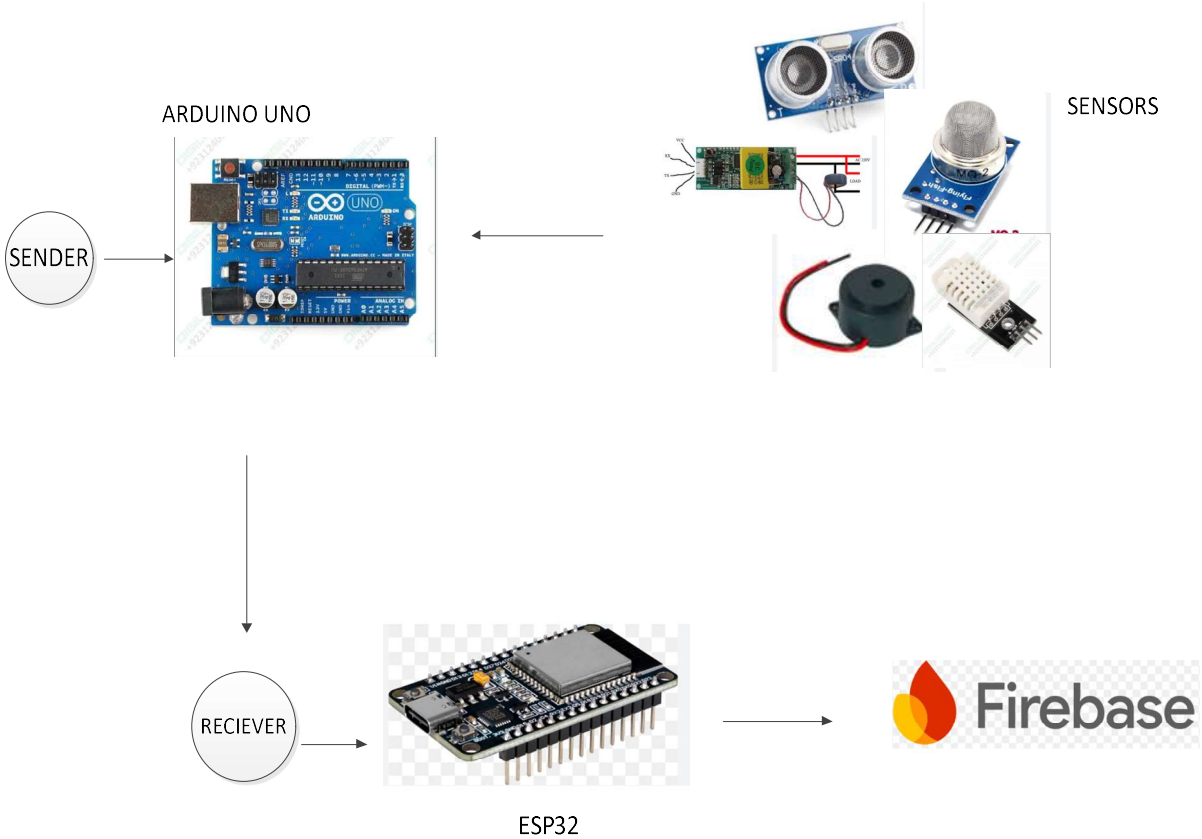

FLOW CHAT REPRESENTATION :

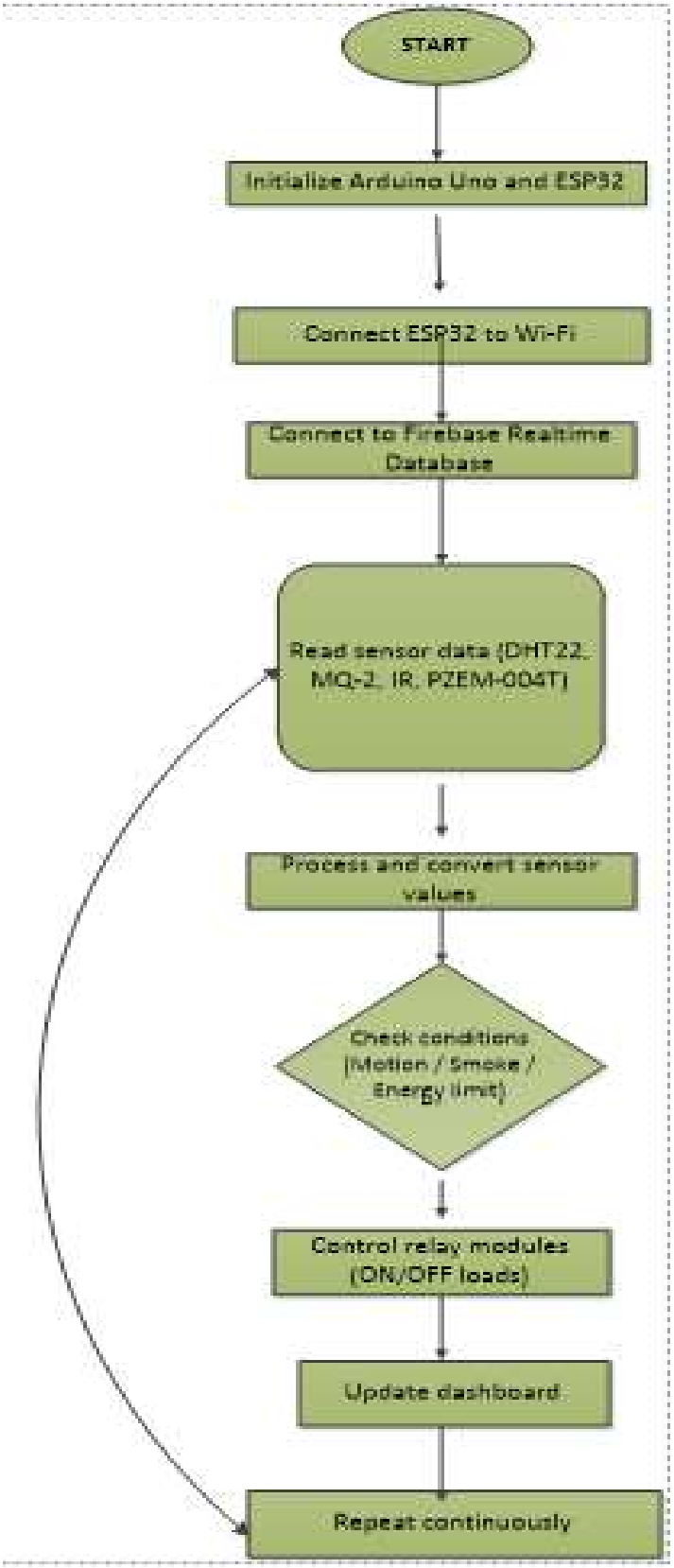

Project Overview

The IoT-Based Smart Electrical Laboratory Automation and Energy Monitoring System will ensure that electrical loads in laboratories are less wasted, safety is enhanced, and that real time monitoring and control of electrical loads is possible. The work of traditional laboratories is usually plagued by the inefficient use of energy resources because of the manual working process and non-monitoring and automation. The electrical appliances like lights, fans and laboratory equipment are kept on even when they are not in use and hence unnecessary power wastages.

To mitigate the above constraints, this project combines Arduino Uno, ESP32, various environmental and electrical sensors, relay boards, and Firebase Real-time Database to design a smart, automated, and cloud-based laboratory system.

This system constantly checks the temperature, humidity, gas/smoke, motion/occupancy and power consumption of electricity. Depending on sensor data and predetermined conditions, it automatically regulates electrical loads and sends all the information to the cloud in order to remotely monitor and control it.

2. System Architecture Description

The overall system is divided into **three main layers**:

1. Sensing and Data Acquisition Layer

This layer consists of multiple sensors connected to the **Arduino Uno**, which acts as the main data acquisition unit.

2. Processing and Communication Layer

The **Arduino Uno** processes sensor data and sends it to the **ESP32** via serial communication. The **ESP32** functions as the IoT gateway.

3. Cloud and Control Layer

The **ESP32** uploads data to **Firebase Realtime Database**, enabling remote monitoring and relay-based load control through a dashboard.

3. Hardware Working (Component-Wise Explanation)

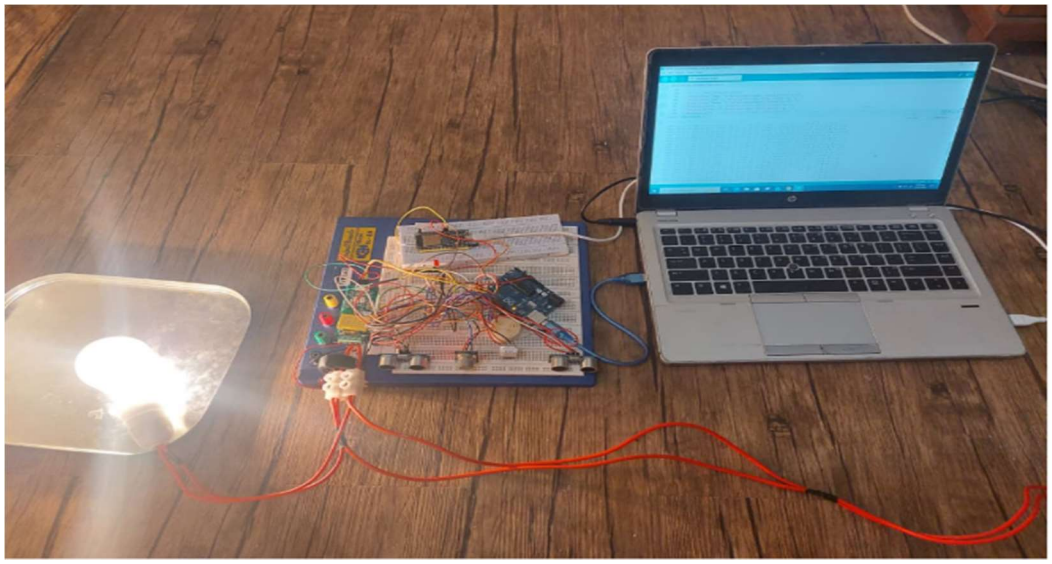

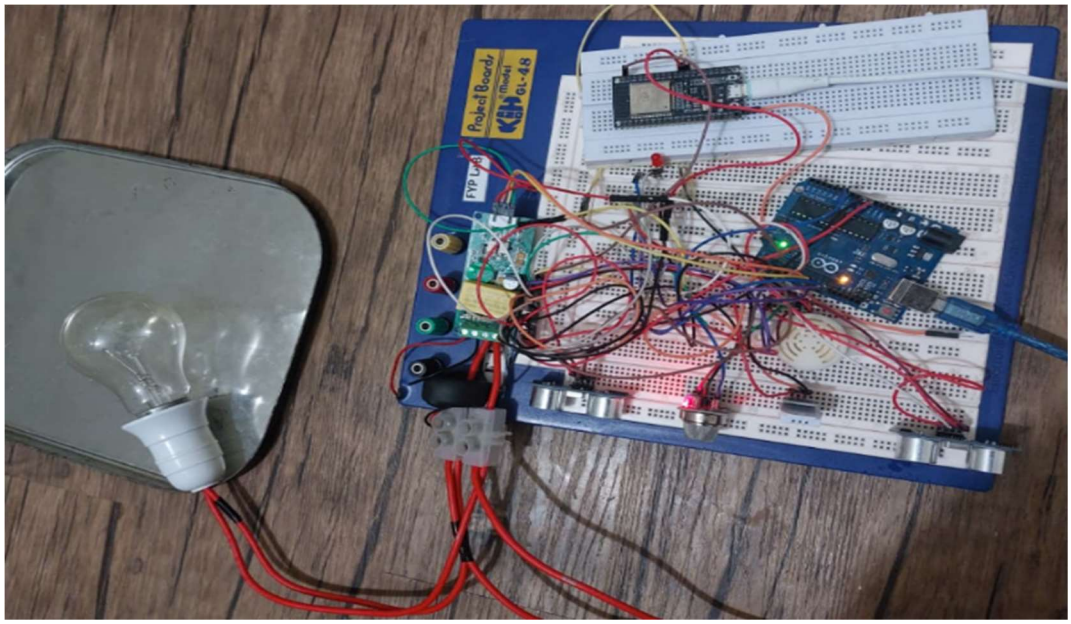

3.1 Arduino Uno – Data Acquisition Unit

Arduino Uno is the main controller of interfacing sensor. It reads analog and digital signals, decodes raw sensor information and interprets and transforms it into useful values that include temperature (degC), humidity, gas levels, motion status, voltage, current, power, and energy.

3.2 DHT22 Temperature and Humidity Sensor

The temperature and humidity of the lab is constantly detected by the DHT22 sensor. Such environmental parameters are required to have safe operating conditions of electrical equipment

and comfortable environment in the lab. The sensor sends the Arduino digital information which is periodically sent to the cloud.

3.3 MQ-2 Gas and Smoke Sensor

MQ-2 sensor senses smoke as well as harmful gases. When the concentration of gas surpasses a certain set limit, the system is able to raise alarms and implement safety measures, including switching off electrical loads. This enhances the safety of the laboratories and prevention of fire hazards.

3.4 Motion Detection (PIR / Ultrasonic Sensor)

Motion sensor tracks the presence of human beings within the laboratory. When no movement is detected after a duration of time, lights and fans will be switched off automatically through relay modules. This characteristic contributes significantly to energy savings through the prevention of the unnecessary use of power.

3.5 PZEM-004T Energy Meter

The PZEM-004T module measures real-time electrical parameters including:

- Voltage (V)
- Current (A)
- Power (W)
- Energy Consumption (kWh)

These measurements help in monitoring energy usage patterns and detecting abnormal consumption. Data is continuously sent to the Arduino and then forwarded to Firebase through the ESP32.

3.7 ESP32 – IoT Gateway

The ESP32 is responsible for:

- Connecting to Wi-Fi
- Uploading sensor data to Firebase Realtime Database
- Receiving control commands from the cloud
- Switching relay modules accordingly

Its built-in Wi-Fi capability eliminates the need for external communication modules.

4. Software Working and Integration

4.1 Sensor Data Acquisition

Arduino Uno continuously reads data from all connected sensors. Analog signals are converted using the built-in ADC, while digital sensors provide direct digital readings.

4.2 Data Processing

Raw sensor data is processed into readable parameters:

- Temperature in °C
- Humidity in %
- Gas intensity levels
- Motion detection status
- Voltage, current, power, and energy values

4.3 Serial Communication

Processed sensor data is transmitted from Arduino Uno to ESP32 using **UART serial communication**. This ensures reliable and fast data transfer between the two controllers.

4.4 Firebase Cloud Integration

The ESP32 uploads sensor data to the **Firebase Realtime Database** at regular intervals. Firebase provides:

- Real-time data synchronization
- Cloud storage
- Remote accessibility
- Live dashboard updates

Users can monitor lab conditions and energy usage from anywhere.

4.5 Automation Logic

Automation decisions are implemented based on predefined rules:

- If no motion is detected → turn OFF lights and fans
- If gas level exceeds threshold → trigger safety response
- If energy consumption exceeds limits → control loads
- Manual override via Firebase dashboard

5. Overall Working Sequence (Step-by-Step)

1. System powers ON and initializes Arduino Uno and ESP32.
2. ESP32 connects to Wi-Fi and Firebase.
3. Arduino reads sensor data continuously.
4. Sensor data is processed and sent to ESP32.
5. ESP32 uploads data to Firebase in real time.
6. Automation logic checks conditions (motion, gas, energy).
7. Relay modules switch loads ON/OFF accordingly.
8. Dashboard displays live data and control options.
9. Process repeats continuously.

6. Results and Performance

- Real-time sensor monitoring achieved successfully
- Firebase update delay less than 2 seconds
- Accurate energy measurement using PZEM-004T
- Reliable automation of lights and fans
- Significant reduction in unnecessary energy consumption

7. Applications

- Smart Electrical Laboratories
- Smart Classrooms
- Energy-Efficient Buildings
- Industrial Monitoring Systems
- Smart Homes

8. Conclusion

The system proposed is able to exhibit a smart laboratory automation and energy monitoring system, which is centered on the use of IoT. The system enhances safety, efficiency, and operations management through the incorporation of environmental sensing, energy monitoring,

cloud connection, and the automation control. It can be used in the learning institutions and intelligent infrastructure due to its cheapness, scalability as well as the real time monitoring.

Programming code(ARDUINO):

```
#include <DHT.h>

#include <SoftwareSerial.h>

#include <PZEM004Tv30.h>


// ---------- DHT22 ----------

#define DHTPIN 2

#define DHTTYPE DHT22

DHT dht(DHTPIN, DHTTYPE);


// ---------- MQ2 ----------

#define MQ2_PIN A0


// ---------- Ultrasonic ----------

#define TRIG1 3

#define ECHO1 4

#define TRIG2 5

#define ECHO2 6


// ---------- Outputs ----------

#define BUZZER 9

#define GREEN_LED 10

#define RED_LED 11


// ---------- SoftwareSerial to ESP32 ----------

SoftwareSerial espSerial(12, 13); // TX -> 12, RX -> 13


// ---------- PZEM ----------

// Use pins 7 (RX) and 8 (TX)

SoftwareSerial pzemSerial(7, 8);

PZEM004Tv30 pzem(pzemSerial);
```

```
// ---------- Ultrasonic function ----------
long getDistance(int trig, int echo) {
  digitalWrite(trig, LOW);
  delayMicroseconds(2);
  digitalWrite(trig, HIGH);
  delayMicroseconds(10);
  digitalWrite(trig, LOW);
  long duration = pulseIn(echo, HIGH, 30000); // 30ms timeout
  if (duration == 0) return -1; // no reading
  return duration * 0.034 / 2;
}

void setup() {
  Serial.begin(9600);         // Serial Monitor
  espSerial.begin(9600);      // ESP32 communication
  pzemSerial.begin(9600);     // PZEM communication
  dht.begin();

  pinMode(TRIG1, OUTPUT);
  pinMode(ECHO1, INPUT);
  pinMode(TRIG2, OUTPUT);
  pinMode(ECHO2, INPUT);

  pinMode(BUZZER, OUTPUT);
  pinMode(GREEN_LED, OUTPUT);
  pinMode(RED_LED, OUTPUT);

  Serial.println("UNO Sensors + PZEM Initialized");
}

void loop() {
  // ----- Read Sensors -----
  float temp = dht.readTemperature();
  float hum  = dht.readHumidity();
  int smoke  = analogRead(MQ2_PIN);
```

```
long d1 = getDistance(TRIG1, ECHO1);
long d2 = getDistance(TRIG2, ECHO2);

// ----- PZEM Readings -----
float voltage = pzem.voltage();
delay(100);
float current = pzem.current();
delay(100);
float power   = pzem.power();
delay(100);
float energy  = pzem.energy();
delay(100);

// Check if PZEM readings are valid
if (isnan(voltage)) voltage = 0;
if (isnan(current)) current = 0;
if (isnan(power))   power = 0;
if (isnan(energy))  energy = 0;

// ----- Control LEDs/Buzzer -----
if (smoke > 400) {
  digitalWrite(RED_LED, HIGH);
  digitalWrite(GREEN_LED, LOW);
  digitalWrite(BUZZER, HIGH);
} else {
  digitalWrite(RED_LED, LOW);
  digitalWrite(GREEN_LED, HIGH);
  digitalWrite(BUZZER, LOW);
}

// ----- Send to Serial Monitor -----
Serial.print("Temp: "); Serial.print(temp); Serial.print(" C, ");
Serial.print("Hum: "); Serial.print(hum); Serial.print(" %, ");
Serial.print("Smoke: "); Serial.print(smoke); Serial.print(", ");
```

```
  Serial.print("D1: "); Serial.print(d1); Serial.print(" cm, ");
  Serial.print("D2: "); Serial.print(d2); Serial.print(" cm, ");
  Serial.print("V: "); Serial.print(voltage); Serial.print(" V, ");
  Serial.print("I: "); Serial.print(current); Serial.print(" A, ");
  Serial.print("P: "); Serial.print(power); Serial.print(" W, ");
  Serial.print("E: "); Serial.println(energy);

  // ----- Send to ESP32 -----
  espSerial.print("TEMP:"); espSerial.println(temp);
  espSerial.print("HUM:");  espSerial.println(hum);
  espSerial.print("SMOKE:");espSerial.println(smoke);
  espSerial.print("D1:");   espSerial.println(d1);
  espSerial.print("D2:");   espSerial.println(d2);
  espSerial.print("VOLT:"); espSerial.println(voltage);
  espSerial.print("CURR:"); espSerial.println(current);
  espSerial.print("POWR:"); espSerial.println(power);
  espSerial.print("ENER:"); espSerial.println(energy);
  espSerial.println("END");

  delay(2000);
}
```

Programmin Code (ESP32)

```
#include <WiFi.h>
#include <Firebase_ESP_Client.h>

// Provide the token generation process info
#include "addons/TokenHelper.h"
#include "addons/RTDBHelper.h"

// ---------- WiFi ----------
#define WIFI_SSID "Name"
#define WIFI_PASSWORD "XXXXXX"

// ---------- Firebase ----------
```

```
#define API_KEY "AIzaSyDsMnd9U6ZKaWFNPIwbsfrGBudQXJe-Ibs"
#define DATABASE_URL "https://smart-eps-lab-default-rtdb.firebaseio.com"

// ---------- Firebase Objects ----------
FirebaseData fbdo;
FirebaseAuth auth;
FirebaseConfig config;

// ---------- Serial from UNO ----------
#define RXD2 16   // ESP32 RX
#define TXD2 17   // ESP32 TX

// ---------- Variables ----------
float temp = 0, hum = 0, voltage = 0, current = 0, power = 0, energy = 0;
int smoke = 0;
long d1 = 0, d2 = 0;

unsigned long sendDataPrevMillis = 0;

void setup() {
  Serial.begin(115200);
  Serial2.begin(9600, SERIAL_8N1, RXD2, TXD2);

  // ---------- WiFi ----------
  WiFi.begin(WIFI_SSID, WIFI_PASSWORD);
  Serial.print("Connecting to WiFi");
  while (WiFi.status() != WL_CONNECTED) {
    Serial.print(".");
    delay(300);
  }
  Serial.println("\nWiFi Connected");

  // ---------- Firebase ----------
  config.api_key = API_KEY;
  config.database_url = DATABASE_URL;
```

```
  // Anonymous sign-in
  auth.user.email = "";
  auth.user.password = "";

  // Token callback
  config.token_status_callback = tokenStatusCallback;

  Firebase.begin(&config, &auth);
  Firebase.reconnectWiFi(true);

  Serial.println("Firebase Initialized");
}

void loop() {
  while (Serial2.available()) {
    String data = Serial2.readStringUntil('\n');
    data.trim();

    Serial.println(data); // Debug

    if (data.startsWith("TEMP:"))   temp    = data.substring(5).toFloat();
    else if (data.startsWith("HUM:"))    hum     = data.substring(4).toFloat();
    else if (data.startsWith("SMOKE:"))  smoke   = data.substring(6).toInt();
    else if (data.startsWith("D1:"))     d1      = data.substring(3).toInt();
    else if (data.startsWith("D2:"))     d2      = data.substring(3).toInt();
    else if (data.startsWith("VOLT:"))   voltage = data.substring(5).toFloat();
    else if (data.startsWith("CURR:"))   current = data.substring(5).toFloat();
    else if (data.startsWith("POWR:"))   power   = data.substring(5).toFloat();
    else if (data.startsWith("ENER:"))   energy  = data.substring(5).toFloat();
    else if (data == "END") {
      uploadFirebase();
    }
  }
}
```

```
void uploadFirebase() {
  if (Firebase.ready()) {
    Serial.println("Uploading to Firebase...");

    Firebase.RTDB.setFloat(&fbdo, "/Sensors/Temperature", temp);
    Firebase.RTDB.setFloat(&fbdo, "/Sensors/Humidity", hum);
    Firebase.RTDB.setInt(&fbdo,   "/Sensors/Smoke", smoke);

    Firebase.RTDB.setInt(&fbdo,   "/Ultrasonic/Distance1", d1);
    Firebase.RTDB.setInt(&fbdo,   "/Ultrasonic/Distance2", d2);

    Firebase.RTDB.setFloat(&fbdo, "/Power/Voltage", voltage);
    Firebase.RTDB.setFloat(&fbdo, "/Power/Current", current);
    Firebase.RTDB.setFloat(&fbdo, "/Power/Power", power);
    Firebase.RTDB.setFloat(&fbdo, "/Power/Energy", energy);

    Serial.println("Firebase Updated Successfully\n");
  } else {
    Serial.println("Firebase NOT ready");
  }
}
```

Result/Software simulation

Checking MQ-2 sensor

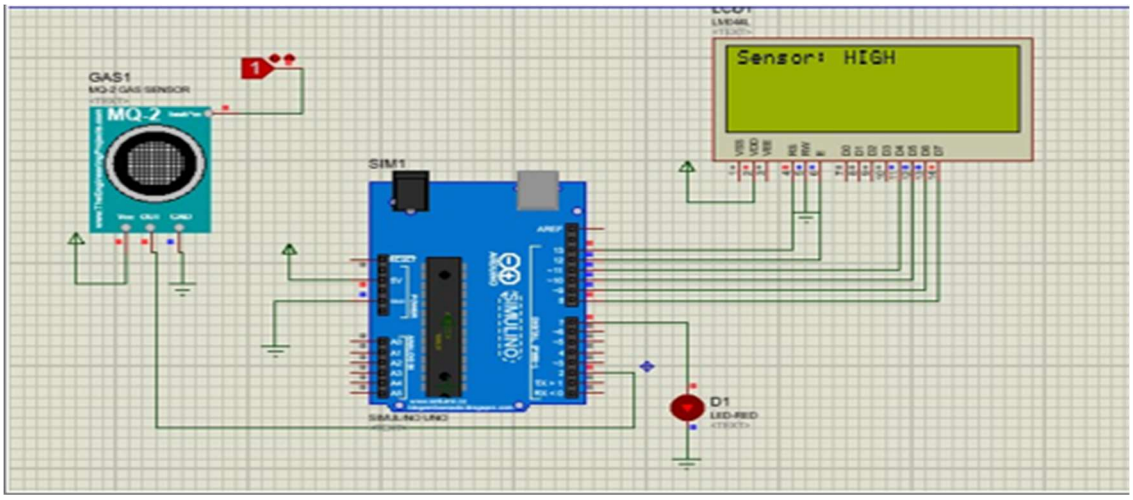

Smart Energy Monitoring

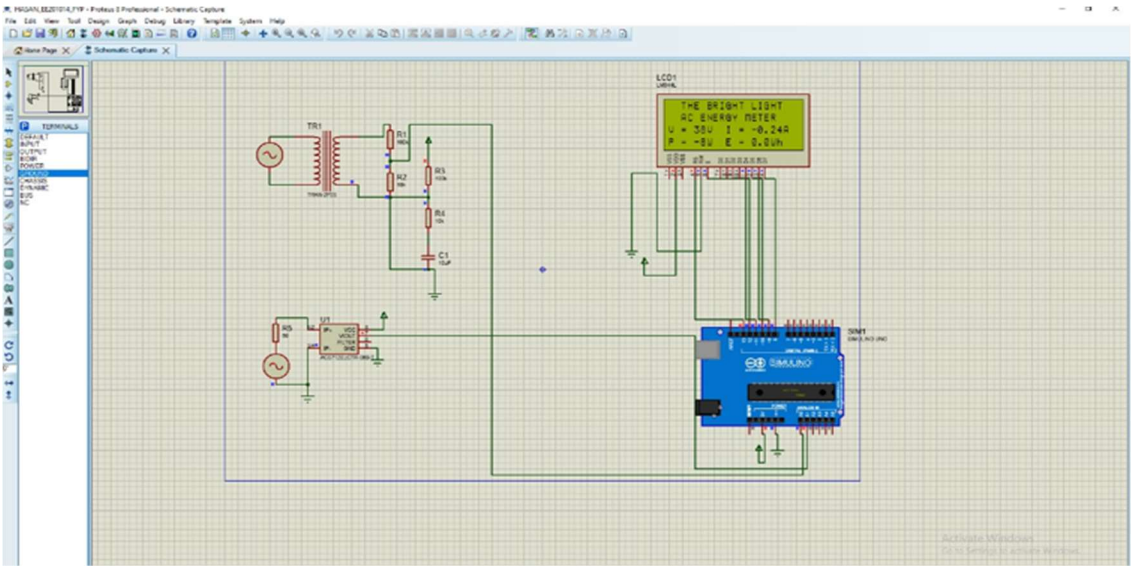

Temperature And Humidity Detaction

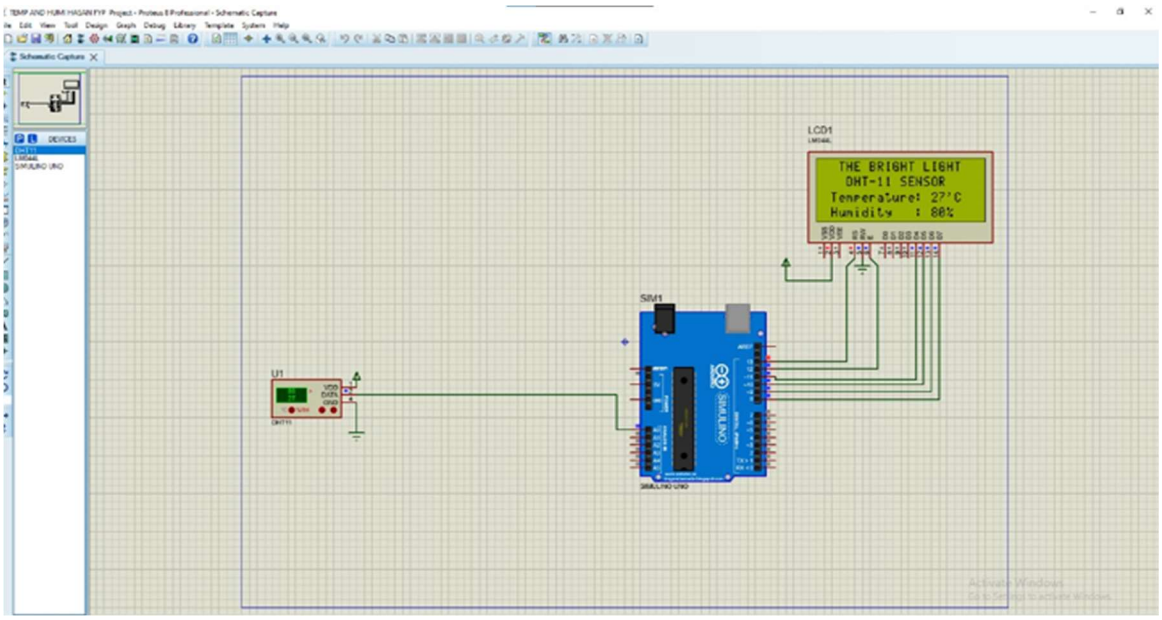

Ultra Sonic Sensor Detection

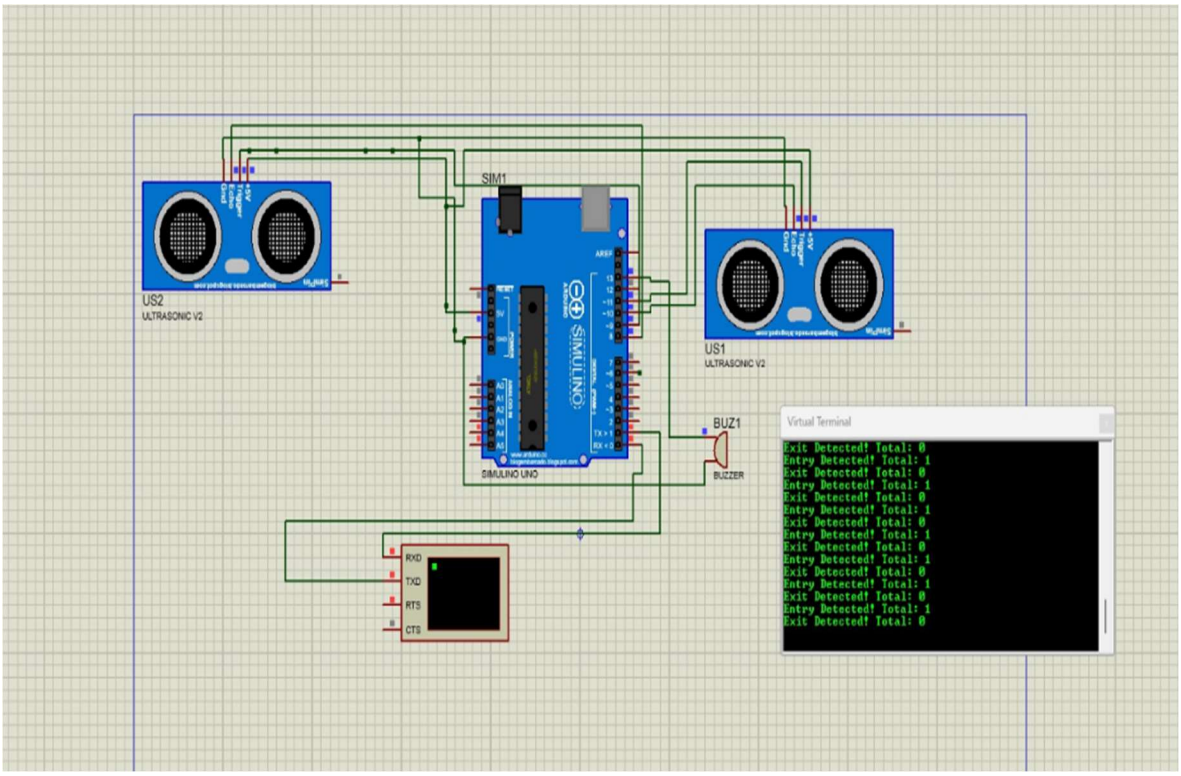

OVERALL INTEGRATION OF SOFTWARE

Conclusion

In this project, the design and implementation of an IoT based smart electrical laboratory automation and energy monitoring system with the help of Arduino Uno, ESP32, and Firebase Realtime Database have been presented successfully. The suggested system is the effective solution to the general issues of energy wastage, absence of real-time monitoring, and manual control of traditional laboratory settings.

With the incorporation of environmental sensors, motion detecting, and the PZEM-004T energy meter, the system constantly checks temperature and humidity, the existence of gases/smoke, occupancy levels, and the use of electrical energy. By use of relay modules, electrical loads including lights and fans can be automatically and remotely controlled which is a significant way of conserving energy and enhancing the safety of operations. Real-time delivery of data to Firebase cloud enables users to check the conditions in the laboratory and manage devices regardless of the location provided he/she has access to the internet.

The experimental findings support the fact that the system performs reliably, reads sensor values correctly, and synchronizes with clouds with a minimum delay. The automation logic is very useful in terms of saving on the costs and sustainable energy management since unnecessary energy consumption can be eliminated by turning off the devices when no one is around. Moreover, the modular nature of the system, low cost of implementation and open-source

platform enables the scalability of this system as a smart lab, classroom and building automation solution.

Altogether, the offered solution demonstrates that the combination of IoT technology, cloud-based monitoring and automation could be used as an efficient, reliable, and cost-effective solution to the management of energy and laboratory automation. The system provides a solid base towards the future advancement of the system including smart scheduling, high-end security, and AI-based energy optimization.

References

[1] S. G. Priyadharshini, C. Subramani, and J. Preetha Roselyn, "An IOT based smart metering development for energy management system," in *Proc. Int. Conf. Future Technol. (ICFT)*, Sangli, India, Nov. 2025, pp. 1–10.

[2] Y. Ghoul and O. Naifar, "An IoT based application for home automation," in *Proc. 5th Int. Conf. Adv. Comput. Sci. (ICACS)*, Lahore, Pakistan, Feb. 2024, pp. 1–18.

[3] M. Poongothai, P. Muthu Subramanian, and A. Rajeswari, "Design and implementation of IoT based smart laboratory," in *Proc. 5th Int. Conf. Ind. Eng. Appl. (ICIEA)*, Singapore, Apr. 2018, pp. 1–5.

[4] M. R. Islam, M. Shipon, M. Safi, R. Islam, K. Ahmad, and T. Fouzder, "Design and implementation of an Internet of Things (IoT) based automation system for enhancing laboratory efficiency," in *Proc. 27th Int. Conf. Comput. Inf. Technol. (ICCIT)*, Cox's Bazar, Bangladesh, Dec. 2024, pp. 1–6.

[5] D. Markovic, D. Vujicic, Z. Stamenkovic, and S. Randic, "IoT base occupancy detection system with data stream processing and artificial neural network," in *Proc. 23rd Int. Symp. Design Diagnostics Electron. Circuits Syst. (DDECS)*, Novi Sad, Serbia, Apr. 2020, pp. 1–4.

[6] C. Guo, B. Hu, W. Zhang, Y. Gao, and H. Liu, "IoT-based edge computing and image processing for occupancy detection," in *Proc. IEEE 11th Int. Conf. Inf., Commun. Netw. (ICICN)*, Xi'an, China, Aug. 2023, pp. 1–6.

[7] N. Ferenclk, P. Kolembusova, M. Danko, Z. Nad'ova, W. Steingartner, and R. Hudak, "Real-time seat occupancy detection in waiting rooms using Arduino Nano IoT 33," in *Proc. Int. Conf. Emerg. eLearning Technol. Appl. (ICETA)*, Stary Smokovec, Oct. 2024, pp. 1–6.

[8] E. Agabi, A. Y. Inuwa, D. Banjerdpongchai, and L. Suwankanit, "Real-time occupancy detection and integration with HVAC control systems in buildings considering energy saving and thermal comfort," in *Proc. 22nd Int. Conf. Electr. Eng./Electron., Comput., Telecommun. Inf. Technol. (ECTI-CON)*, Bangkok, Thailand, May 2025, pp. 1–6.

[9] M. J. C. Samonte, F. A. G. Mendoza, R. Pablo, and S. M. P. Villa, "Internet-of-Things based smart laboratory environment monitoring system," in *Proc. IEEE 8th Int. Conf. Ind. Eng. Appl. (ICIEA)*, Chengdu, China, Apr. 2021, pp. 1–6.

[10] S. Khriji, D. El Houssaini, R. Barioul, T. Rehman, and O. Kanoun, "Smart-Lab: Design and implementation of an IoT-based laboratory platform," in *Proc. IEEE 6th World Forum Internet Things (WF-IoT)*, New Orleans, LA, USA, Jun. 2020, pp. 1–5.

[11] E. Bouali, M. R. Abid, E. Boufounas, T. A. Hamed, and D. Benhaddou, "Renewable energy integration into cloud & IoT-based smart agriculture," *IEEE Access*, vol. 10, pp. 1–17, Dec. 2021.

[12] T. J. Sheng, N. Misran, M. S. Islam, M. H. Baharuddin, H. Arshad, M. R. Islam, H. Rmili, M. E. H. Chowdhury, and M. T. Islam, "An Internet of Things based smart waste management system using LoRa and Tensorflow deep learning model," *IEEE Access*, vol. 8, pp. 1–19, Aug. 2020.

[13] M. Khan, B. N. Silva, and K. Han, "Internet of Things based energy aware smart home control system," *IEEE Access*, vol. 4, pp. 1–11, Oct. 2016.

[14] K. Akkaya, I. Guvenc, R. Aygun, N. Pala, and A. Kadri, "IoT-based occupancy monitoring techniques for energy-efficient smart buildings," in *Proc. IEEE Wireless Commun. Netw. Conf. Workshops (WCNCW)*, New Orleans, LA, USA, Mar. 2015, pp. 1–6.

[15] K. N. Qureshi, A. Khan, S. U. U. Jamil, B. Sharma, and G. Jeon, "Internet of Things enables smart solid waste bin management system for a sustainable environment," in *Proc. 7th Int. Conf. Inventive Mater. Sci. Appl. (ICIMA)*, Namakkal, India, May 2025, pp. 1–9.

[16] M. S. Al Sadi, M. M. Islam, T. A. Rumman, M. S. Parvez, A. Ahmed, and M. R. Hazari, "Design and implementation of an IoT-based home automation system," in *Proc. 24th Int. Conf. Comput. Inf. Technol. (ICCIT)*, Dhaka, Bangladesh, Dec. 2021, pp. 1–9.

[17] C. Tang, W. Li, K. Chetty, S. Julier, and K. Woodbridge, "Occupancy detection and people counting using WiFi passive radar," in *Proc. IEEE Radar Conf. (RadarConf20)*, Florence, Italy, Sep. 2020, pp. 1–6.

[18] H. Suo and J. Wan, "Security in the Internet of Things: A review," in *Proc. Int. Conf. Comput. Sci. Electron. Eng. (ICCSEE)*, Hangzhou, China, Mar. 2012, pp. 1–4.

[19] D. K. Peters and D. L. Parnas, "Requirements-based monitors for real-time systems," *IEEE Trans. Softw. Eng.*, vol. 28, no. 2, pp. 1–13, Feb. 2002.

[20] B. Plattner, "Real-time execution monitoring," *IEEE Trans. Softw. Eng.*, vol. SE-10, no. 6, pp. 1–9, Nov. 1984.

[21] E. Welbourne, L. Battle, G. Cole, K. Gould, K. Rector, S. Raymer, M. Balazinska, and G. Borriello, "Building the Internet of Things using RFID: The RFID ecosystem experience," *IEEE Internet Comput.*, vol. 13, no. 3, pp. 1–8, May 2009.

[22] P. T. Ganai, A. Bag, A. Sable, K. H. Abdullah, S. Bhatia, and B. Pant, "A detailed investigation of implementation of Internet of Things (IoT) in cyber security in healthcare sector," in *Proc. 2nd Int. Conf. Adv. Comput. Innov. Technol. Eng. (ICACITE)*, Greater Noida, India, Apr. 2022, pp. 1–5.

[23] H. O. Unver, "System architectures enabling reconfigurable laboratory-automation systems," *IEEE Trans. Syst., Man, Cybern. C*, vol. 41, no. 6, pp. 1–14, Nov. 2011.

[24] J. Bojkovski, J. Drnovšek, I. Pušnik, and T. Tasic, "Automation of a precision temperature calibration laboratory," *IEEE Trans. Instrum. Meas.*, vol. 49, no. 3, pp. 1–6, Jun. 2000.

[25] J. F. Dickson III, "Automation of clinical laboratories," *Proc. IEEE*, vol. 57, no. 11, pp. 1–14, Nov. 1969.

[26] M. S. Thomas, D. P. Kothari, and A. Prakash, "Design, development, and commissioning of a substation automation laboratory to enhance learning," *IEEE Trans. Educ.*, vol. 54, no. 2, pp. 1–8, May 2011.

[27] G. Silverman, "Automation in the biomedical laboratory," *IEEE Trans. Biomed. Eng.*, vol. BME-31, no. 12, pp. 1–5, Dec. 1984.

[28] A. A. Guido, H. Cole, and L. B. Kreighbaum, "Interactive laboratory automation aid: The research device coupler," *Proc. IEEE*, vol. 63, no. 10, pp. 1–6, Oct. 1975.

[29] IBM, "Interleaving slow- and rapid-data-rate experiments with a time-sharing laboratory automation system," *IBM J. Res. Dev.*, vol. 15, no. 4, pp. 1–3, Jul. 1971.

[30] C. J. Kelly and C. A. Gagliardi, "Interactive X-ray laboratory automation utilizing multiuser basic," *Proc. IEEE*, vol. 63, no. 10, pp. 1–6, Oct. 1975.

[31] J. Kumar and P. R. Ramesh, "Low cost energy efficient smart security system with information stamping for IoT networks," in *Proc. 3rd Int. Conf. Internet Things: Smart Innov. Usages (IoT-SIU)*, Bhimtal, India, Nov. 2018, pp. 1–5.

[32] F. Ertam, I. F. Kilincer, O. Yaman, and A. Sengur, "A new IoT application for dynamic WiFi based wireless sensor network," in *Proc. Int. Conf. Electr. Eng. (ICEE)*, Istanbul, Turkey, Sep. 2020, pp. 1–4.

[33] A. K. Singh and P. Kumar, "Advancement in quality of services in wireless sensor networks," in *Proc. 3rd Int. Conf. Internet Things: Smart Innov. Usages (IoT-SIU)*, Bhimtal, India, Feb. 2018, pp. 1–5.

[34] M. Ghosh, R. Sushil, and K. Ghosh, "Title of paper," in *Proc. 4th Int. Conf. Internet Things: Smart Innov. Usages (IoT-SIU)*, Ghaziabad, India, Apr. 2019, pp. 1–5.

[35] Q. Zhu, R. Wang, Q. Chen, Y. Liu, and W. Qin, "IoT gateway: Bridging wireless sensor networks into Internet of Things," in *Proc. IEEE/IFIP Int. Conf. Embedded Ubiquitous Comput. (EUC)*, Hong Kong, China, Dec. 2010, pp. 1–6.

[36] O. Singh, V. Rishiwal, and M. Yadav, "Energy efficient routing scheme for enhancing lifetime in wireless sensor networks," in *Proc. 3rd Int. Conf. Internet Things: Smart Innov. Usages (IoT-SIU)*, Bhimtal, India, Feb. 2018, pp. 1–7.

[37] A. Rawat, A. Gupta, A. Singh, and S. Bhushan, "Energy conservation and missing value prediction model in wireless sensor network," in *Proc. 4th Int. Conf. Internet Things: Smart Innov. Usages (IoT-SIU)*, Ghaziabad, India, Apr. 2019, pp. 1–5.

[38] N. Ahmad, A. Hussain, I. Ullah, and B. H. Zaidi, "IoT based wireless sensor network for precision agriculture," in *Proc. 7th Int. Electr. Eng. Congr. (iEECON)*, Hua Hin, Thailand, Mar. 2019, pp. 1–4.

[39] P. Rahimi and C. Chrysostomou, "Improving the network lifetime and performance of wireless sensor networks for IoT applications based on fuzzy logic," in *Proc. 15th Int. Conf. Distrib. Comput. Sens. Syst. (DCOSS)*, Santorini, Greece, May 2019, pp. 1–8.

[40] M. Muzaffar Iqbal, M. Waseem, A. Manan, R. Liaqat, A. Muqeet, and A. Wasaya, "IoT-enabled smart home energy management strategy for DR actions in smart grid paradigm," in *Proc. Int. Bhurban Conf. Appl. Sci. Technol. (IBCAST)*, Islamabad, Pakistan, Jan. 2021, pp. 1–6.